Electronic Service Manuals

This electronic document is provided as a service to our customers. We do not create the contents of the information contained in this document. Should you have detailed questions pertaining to the information contained in this document, you may contact Michco, or the manufacturer which provided the original information in this electronic deliverable. Michco's only part in this electronic deliverable was the electronic assembly process.

You may contact Michco through the following methods:
Phone (517) 484-9312 or (800) 331-3339 MI, OH, IN only
2011 N. High St. -- Lansing, Michigan -- 48906
Fax: (517) 484-9836
Email: CustServ@Michco.com
Web site: www.Michco.Com
Parts Web site: www.FloorMachineParts.Com

Order Parts on Line at:
www.FloorMachineParts.Com

Directly to Parts & Service:
By Email: **Shop@Michco.com**
By Fax: (517) 702-2041
By Voice: Use numbers above.

Serving the Cleaning Industry Since 1922

Notice: All copyrighted material remains property of original owners, all trademarks are property of respective owners. Manuals are subject to Manufacturer's reproduction limitations. Originals or reproductions were provided by manufacturers through a request. We make no warranty as to the correctness of information provided in this document and you assume all risk.

Hydro-Retriever™ 260BHD

PARTS LIST
Advance MODEL 56372210(Obsolete)
This parts list is for machines after serial number 381160

Nilfisk Advance
setting standards

revised 2/01 FORM NO. 56042242

TABLE OF CONTENTS

DESCRIPTION	PAGE
Housing & Skirts	1-2
Control Handle	3-4
Rear Body	5-6
Battery Housing	7-8
Brush & Vac Motors	9-10
Drive Unit	11-12
Hood & Tanks	13-14
Squeegee & Mount	15-16
Gear Box	17-18
Wiring Diagram	19-20

WHEN ORDERING PARTS

* Use the 6 digit numbers from the “Part No.” columns in this parts list.
* Specify the model and serial number of the machine.
* Use the space below to record the model and serial number for future reference.

Model _____ Serial No. _____

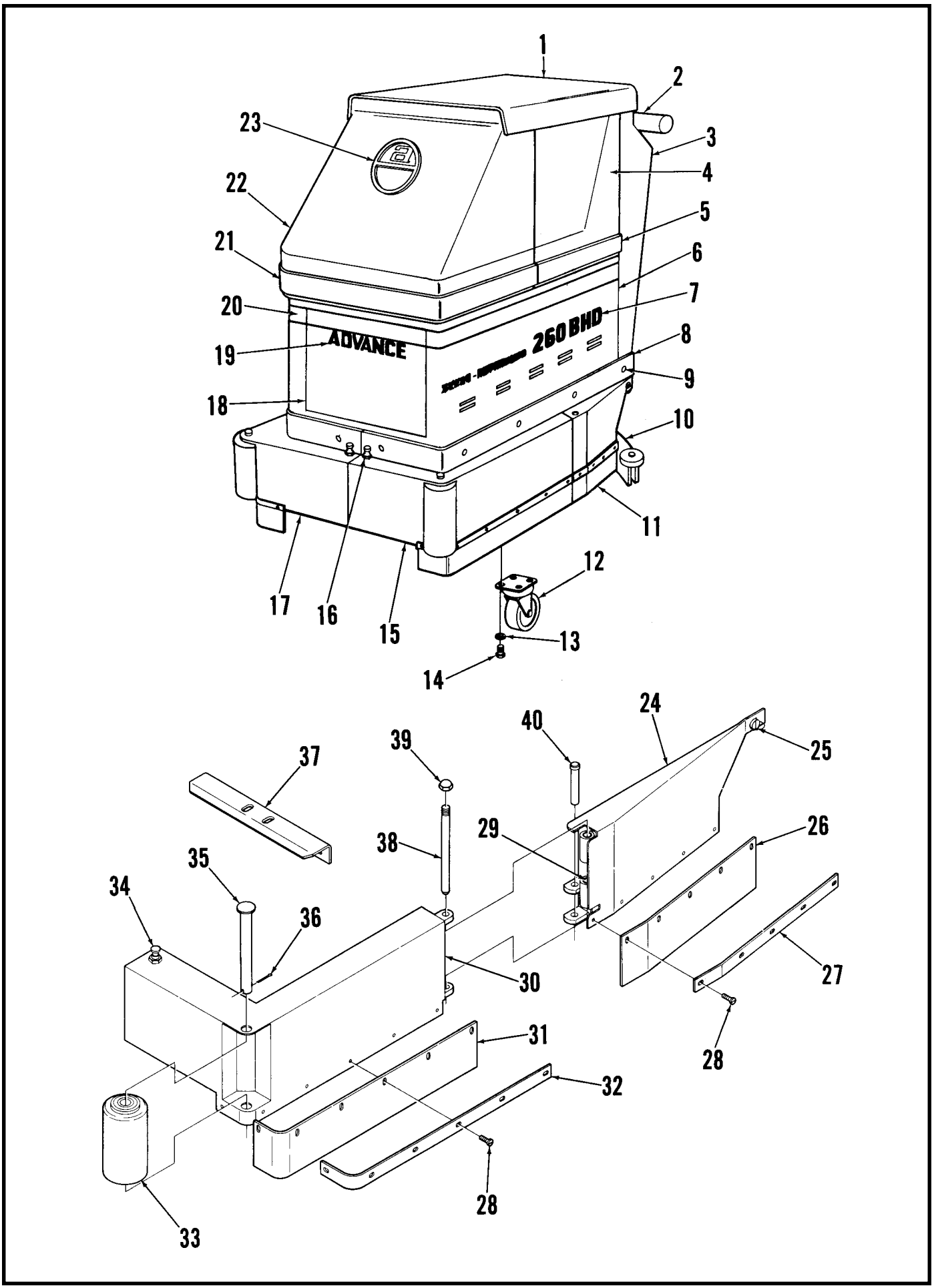
1
2
3
4
5
6
7
8
9
10
11
12
13
14
15
16
17
18
19
20
21
22
23
ADVANCE
260 BHD
24
25
26
27
28
28
29
30
31
32
33
34
35
36
37
38
39
40

HOUSING & SKIRTS

Item	Part No.	Qty	Description
1	372019	1	Hood Assembly
2	372245	1	Control Panel Assembly
3	372221	1	Chassis
4	372251	1	Recovery Tank Assembly
5	372402	2	Bumper
*	372400	2	Strap
6	372238	1	Battery Housing Assembly
7	016925	2	Decal, Hydro-Retriever 260 BHD
8	372262	2	Bumper **
*	371955	2	Strap **
9		10	#10-24 x 1/2 Screw **
10	372750	1	Squeegee Assembly
11	372282	1	Left Rear Splash Guard Assembly
*	372278	1	Right Rear Splash Guard Assembly
12	365629	1	Caster
13		4	3/8 Lock Washer
14		4	3/8-16 x 1 Bolt
15	372290	1	Left Front Splash Guard Assembly
16	365548	2	Lock
17	372286	1	Right Front Splash Guard Assembly
18	372551	1	Door
19	014794	1	Decal, Advance
20	014645	2	Decal, Stripe
21	372406	1	Bumper
22	372239	1	Solution Tank Assembly
23	024958	1	Emblem, Advance
24	372284	1	Left Rear Splash Guard
*	372280	1	Right Rear Splash Guard
25	448104	2	Screw Fastener
*	448108	2	Washer Retainer
26	372920	2	Rear Skirt
27	372936	1	Left Rear Strap
*	372918	1	Right Rear Strap
28	372929	22	Screw
29	372201	8	Bearing
30	372292	1	Left Front Splash Guard
*	372288	1	Right Front Splash Guard
31	372876	2	Front Skirt
32	372874	2	Front Strap
33	372740	2	Bumper Roller Assembly
	372742	2	Bumper Roller
	362352	4	Bearing
34	365548	2	Lock **TSB 600 - G10**
35	372882	2	Pin
36		2	1/8 x 1 Cotter Pin
37	372294	1	Bracket
38	372878	2	Pin
39	372880	2	Cap Nut
40	360147	2	Pin

* = Not Shown

**** Note:** Bumpers and straps not used on machines after 11/92

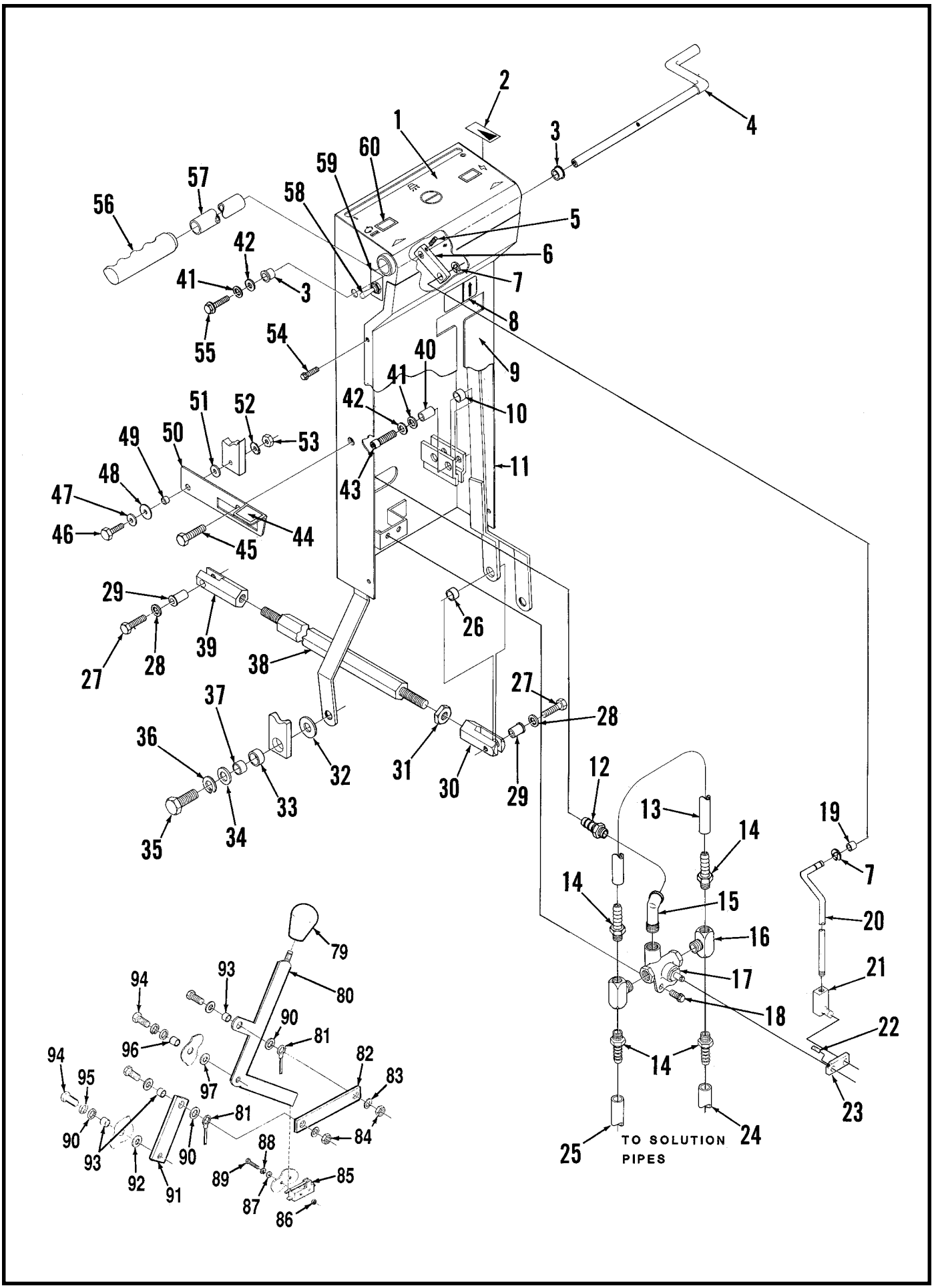
TO SOLUTION PIPES

CONTROL HANDLE

Item	Part No.	Qty	Description
1	014529	1	Decal, Control Panel
2	016334	1	Decal, Solution Valve
3	329098	2	Nylon Bushing
4	373459	1	Valve Handle
5		1	1/8 x 3/4 Pin
6	373457	1	Lifter Arm
7	373797	2	Retaining Ring
8	054195	1	Decal, Brush
9	372041	1	Cover
10	365088	2	Bushing
11	372003	1	Handle Frame
12	373456	1	Barb
13	379108	1	Tube
14	155640	4	Barb
15	369632	1	Elbow
16	372506	2	Tee
17	368881	1	Valve
	373454	1	Valve Assembly (#12-17,23)
18		2	#10-24 x 1 Screw
19	373795	1	Bearing
20	373453	1	Lever
21	373462	1	Ball Joint
22		1	#10-24 x 3/4 Set Screw
23	373455	1	Valve Arm
24	375408	1	Right Tube
25	375410	1	Left Tube
26	366633	1	Bearing
27		2	3/8-16 x 1-1/4 Bolt
28		2	3/8 Lock Washer
29	366625	2	Bushing
30	366617	1	Right Yoke
31		1	1/2-13 Nut
32	367192	2	Washer
33	367168	2	Bearing
34	367214	2	Washer
35		2	1/2-13 x 1-1/4 Bolt
36		2	1/2 Lock Washer
37	367206	2	Bushing
38	372005	1	Drive Adjust Rod
39	366609	1	Left Yoke
40	365089	2	Bushing
41		2	#10 Lock Washer
42		2	#10 Washer
43		2	#10-24 x 1 Screw
44	014544	1	Decal, Latch
45		1	3/8-16 x 1-1/4 Bolt
46		1	1/4-20 x 1-1/2 Screw
47		1	1/4 Washer
48	151068	1	Fiber Washer
49	368997	1	Bushing
50	372636	1	Latch
51	151041	1	Spring Washer
52		1	1/4 Lock Washer
53		1	1/4-20 Nut
54		4	#6-32 x 1/2 Screw
*	706234	4	Nutsert
55		1	#10-24 x 3/8 Screw
56	514085	2	Hand Grip
57	372837	1	Handle Tube
58	207071	2	Toggle Switch
59	016616	1	Decal, Brush Switch (Left)
*	016112	1	Decal, Main Switch (Right)
60	467410	2	Indicator Light
61	364527	1	Knob
62	372638	1	Lever
63	384909	2	Wire Rope
64	374944	1	Bar
65		2	1/4 Shakeproof Washer
66		2	1/4-20 Nut
67	388019	1	Switch
68		2	#6-32 Nut
69		2	#6 Washer
70		2	#6 Lock Washer
71		2	#6-32 x 7/8 Screw
72		4	1/4 Washer
73	374942	1	Lifter Box
74	150142	4	Washer
75	379298	3	Bushing
76		4	1/4-20 x 5/8 Screw
77		2	1/4 Lock Washer
78	206784	1	Bushing
79	364527	1	Knob
80	372638	1	Lever
81	384909	2	Wire Rope
82	374944	1	Bar
83		2	1/4 Shakeproof Washer
84		2	1/4-20 Nut
85	388019	1	Switch
86		2	#6-32 Nut
87		2	#6 Washer
88		2	#6 Lock Washer
89		2	#6-32 x 7/8 Screw
90		4	1/4 Washer
91	374942	1	Lifter Bar
92	150142	4	Washer
93	379298	3	Bushing
94		4	1/4-20 x 5/8 Screw
95		2	1/4 Lock Washer
96	206784	1	Bushing
97	163880	1	Spring Washer

* = Not Shown

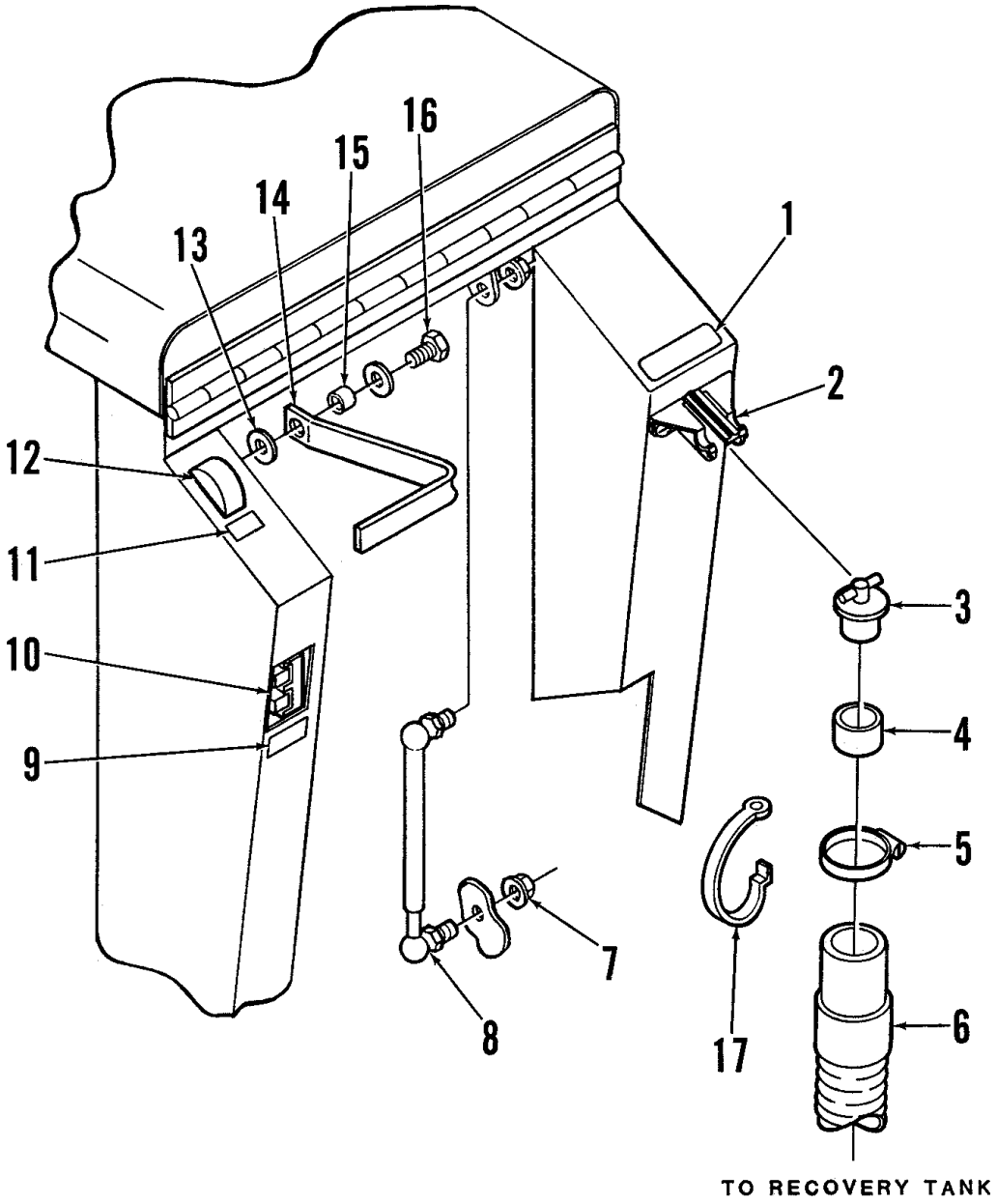
16
15
14
13
1
2
12
11
3
10
4
9
5
7
8
17
6
TO RECOVERY TANK

REAR BODY

Item	Part No.	Qty	Description
1	015379	1	Decal, Warning
2	386058	1	Hanger
3	376948	1	Plug
4	376940	1	Cuff
5	329145	2	Hose Clamp
6	395865	1	Hose
7		2	5/16-18 Nut
8	385238	1	Cylinder
9	054192	1	Decal, Charger
10	372972	1	Charger Plug
11	016114	1	Decal, Volt Meter
12	364210	1	Volt Meter
13	150142	2	Washer
14	364506	1	Handle
15	368997	1	Bushing
16		1	1/4-20 x 5/8 Screw
17	261378	1	Strap

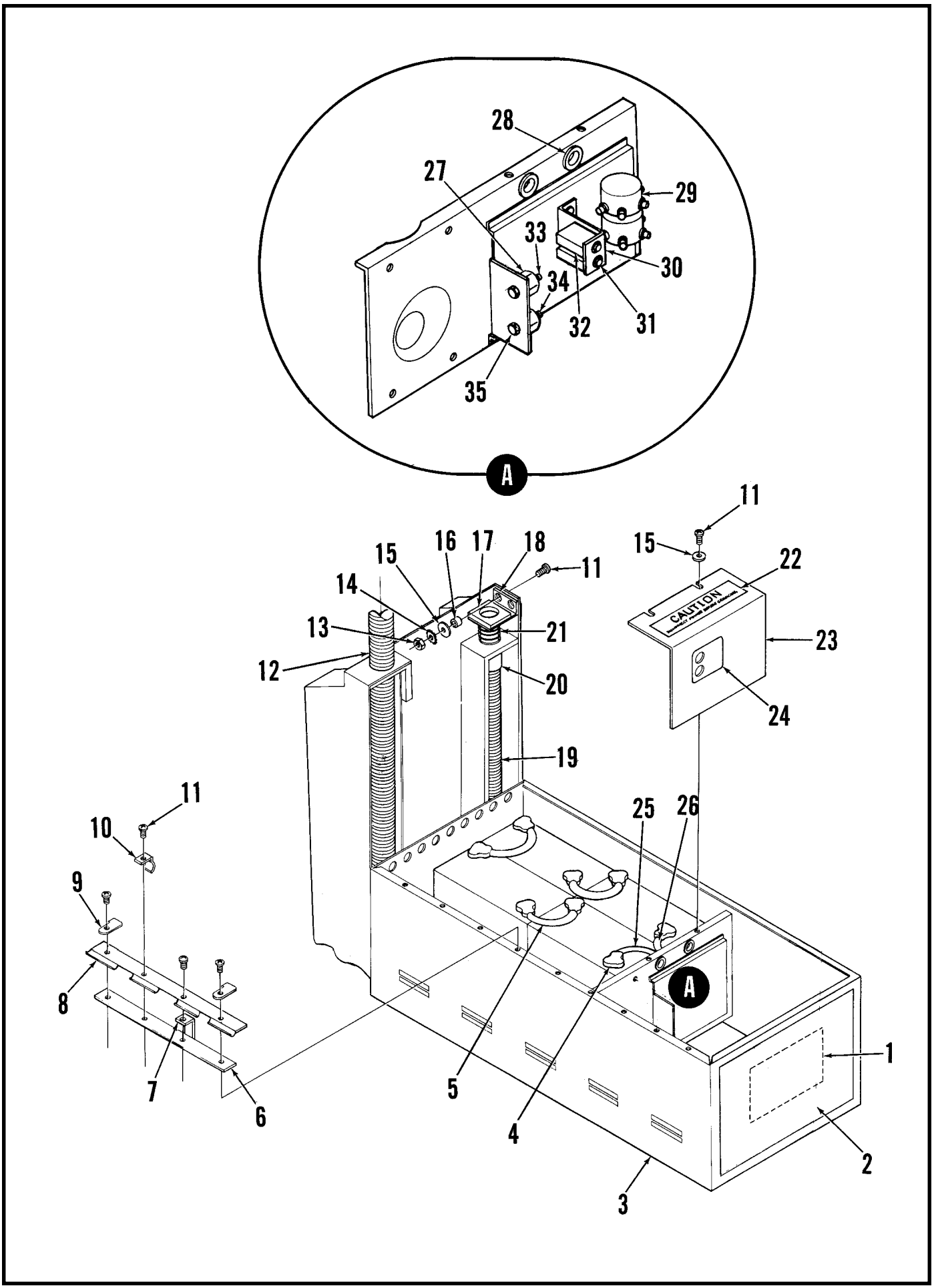
28
27
29
33
30
34
32
31
35
A
11
15
22
CAUTION
23
24
15
16
17
18
11
14
13
21
12
20
19
11
10
9
8
7
6
5
4
25
26
A
1
2
3

BATTERY HOUSING

Item	Part No.	Qty	Description
1	016391	1	Decal, Wiring
2	372551	1	Door
3	372212	1	Battery Housing
4	372673	8	Battery Cable Boot
5	363928	3	Battery Cable
6	385414	1	Nut Plate
7	373794	1	Hose Clip
8	361674	1	Hinge
9	381053	2	Hinge Clip
10	373791	1	Hose Clip
11		9	#10-24 x 1/2 Screw
12	372010	1	Vacuum Hose
13		2	#10-24 Nut
14		2	#10 Lock Washer
15		2	#10 Washer
16	151092	2	Bushing
17	385055	1	Gasket
18	385052	1	Tube
19	550941	1	Hose
20	209957	2	Hose Cuff
21	404800	1	Spring
22	025363	1	Decal, Caution
23	372213	1	Solenoid Cover
24	016122	1	Decal, Circuit Breaker
25	441775	1	Negative Battery Cable
26	363979	1	Positive Battery Cable
27	469858	2	Insulated Stand Off
28	157376	2	Grommet
29	468358	2	Solenoid
*	389265	2	Rectifier
30	372011	1	Circuit Breaker Bracket
31	386725	1	Circuit Breaker 50 Amp
32	395454	1	Circuit Breaker 20 Amp
33	150274	1	Stud
34	454376	4	Stud
*	372922	1	Battery Tray
*	372908	1	Battery Spacer Channel
			Batteries **
	372730	4	Battery 6V, 220 AH
	376014	4	Battery 6V, 244 AH
			Optional Battery Chargers **
*	372947	1	24V Automatic Charger
*	372945	1	24V Manual Charger

* = Not Shown
** = Not Included

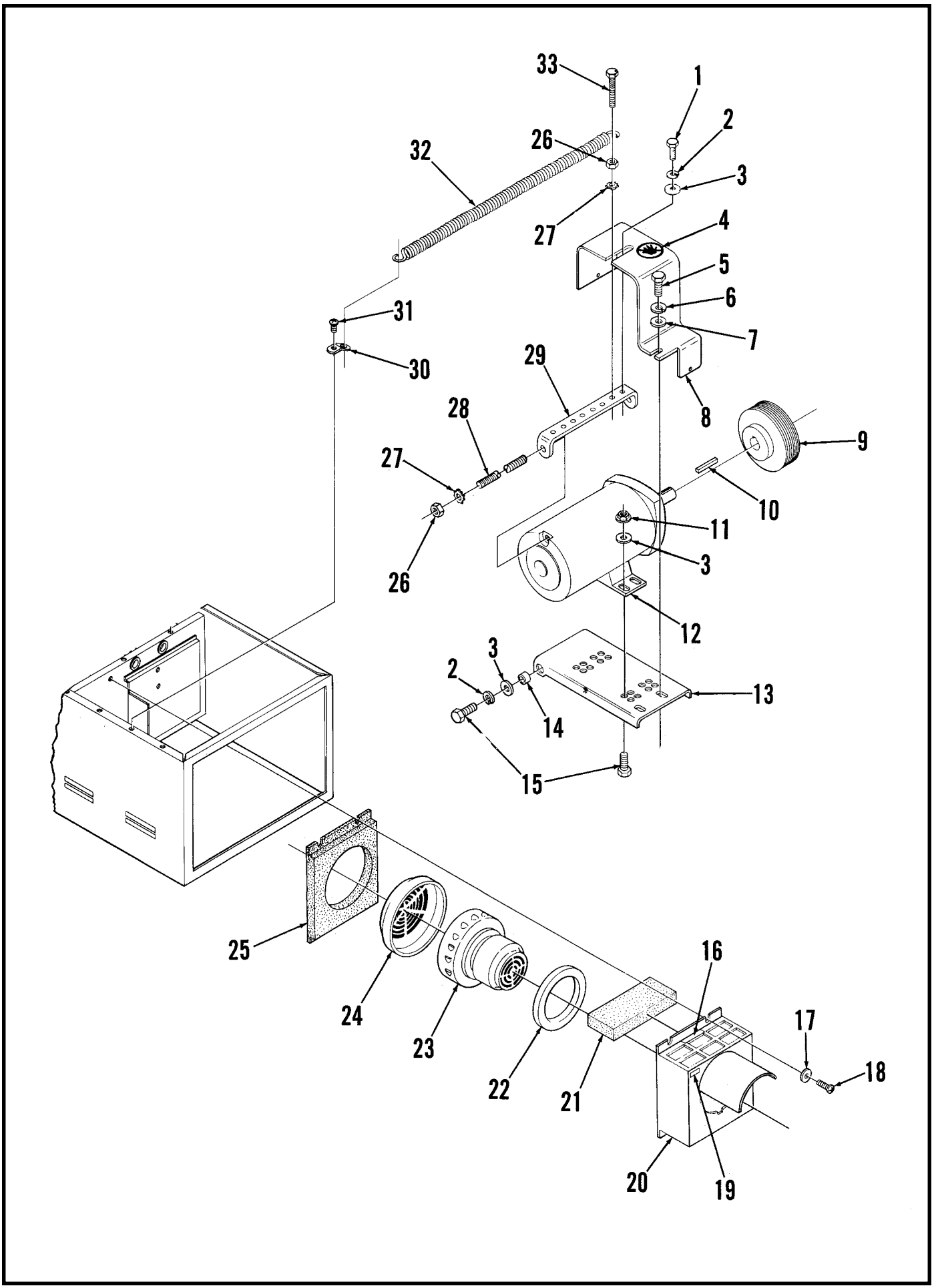
33
1
2
26
32
3
27
4
5
6
31
7
30
29
8
28
9
27
10
11
3
26
12
3
2
13
14
15
25
16
24
17
23
18
22
21
20
19

BRUSH & VAC MOTORS

Item	Part No.	Qty	Description
1		3	1/4-20 x 1/2 Screw
2		1	1/4 Lock Washer
3		1	1/4 Washer
4	030080	1	Decal, Hands Clear
5		2	5/16-18 x 1 Bolt
6		2	5/16 Lock Washer
7		2	5/16 Washer
8	372042	1	Belt Guard
9	372626	1	Sheave
10	367958	1	Key
11		4	1/4-20 Whiz Nut
12	372765	1	24 VDC Motor
*	448729	1	Carbon Brush (set of 4)
13	372039	1	Motor Mount Plate
14	368997	2	Bushing
15		6	1/4-20 x 3/4 Screw
16	016546	1	Decal, This End Up
17		4	#10 Washer
18		4	#10-32 x 1/2 Screw
19	016591	1	Decal, 24V
20	372032	1	Vacuum Motor Adapter
21	380922	1	Filter
22	209325	1	Vacuum Motor Gasket
23	376365	1	Vacuum Motor 24V
*	376369	1	Carbon Brush Set for #23
24	384898	1	Filter
25	375335	1	Gasket
26		2	1/4-20 Nut
27		2	1/4 Lock Washer
28	379811	1	Stud
29	372235	1	Spring Bracket
30	300225	1	Spring Clip
31		1	#10-24 x 1/2 Screw
32	371114	1	Spring
33		1	1/4-20 x 1-1/2 Screw

* = Not Shown

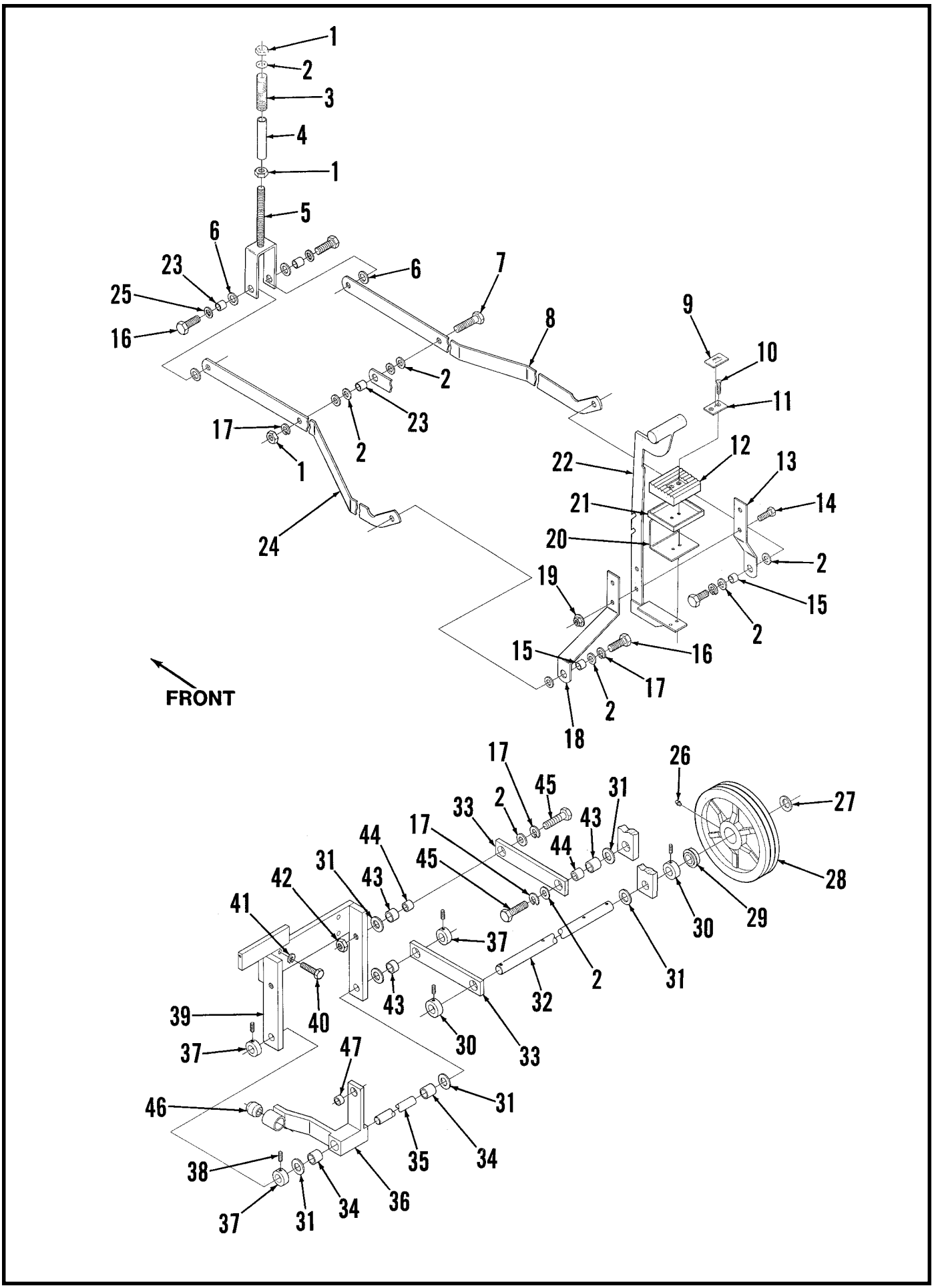
1
2
3
4
1
5
6
23
25
16
6
7
8
9
10
11
2
23
2
17
1
24
22
12
13
21
14
20
2
19
15
2
15
16
17
2
18
FRONT
17
45
2
33
31
26
27
44
17
43
44
45
31
43
42
41
28
29
30
37
2
31
43
32
39
40
30
33
37
47
46
31
35
34
38
36
37
31
34

DRIVE UNIT

Item	Part No.	Qty	Description
1		3	1/2-13 Nut
2	367214	15	Washer
2	372129	1	Spring
4	372110	1	Spacer
5	372102	1	Yoke
6		4	5/8 Washer
7		1	1/2-13 x 1-3/4 Bolt
8	372154	1	Right Arm
9	016281	1	Decal, Brush
10		2	1/4-20 x 1 Screw
11	365081	1	Plate
12	365086	1	Pad
13	373606	1	Right Plate
14		2	3/8-16 x 1-1/4 Bolt
15	365030	2	Bushing
16		4	1/2-13 x 1 Bolt
17		6	1/2 Lock Washer
18	373614	1	Left Plate
19		2	3/8-16 Nut
20	380255	1	Foot Guard
21	365087	1	Pedal Cup
22	372147	1	Pedal
23	360627	3	Bushing
24	372162	1	Left arm
25		2	1/2 Lock Washer
26	101737	2	Grease Fitting
27	362883	2	Bowed Washer
	377945	2	Wheel Assembly (#28-29)
28	377961	2	Wheel
29	362352	4	Bearing
30	367095	4	Collar
31	367192	10	Washer
32	372196	1	Axle
33	372708	4	Drive Unit Arm
34	367389	2	Bearing
35	367346	1	Shaft
36	366581	1	Lever
37	367354	3	Collar
38		7	5/16-18 x 1/2 Set Screw
39	550569	1	Gear Case Bracket
40		4	3/8-16 x 1 Bolt
41		4	3/8 Lock Washer
42	441236	2	Spring Lock Nut
43	367168	6	Bearing
44	367206	4	Bushing
45		4	1/2-13 x 1-1/2 Bolt
46	114545	1	Rubber Bushing
47	366633	1	Bearing

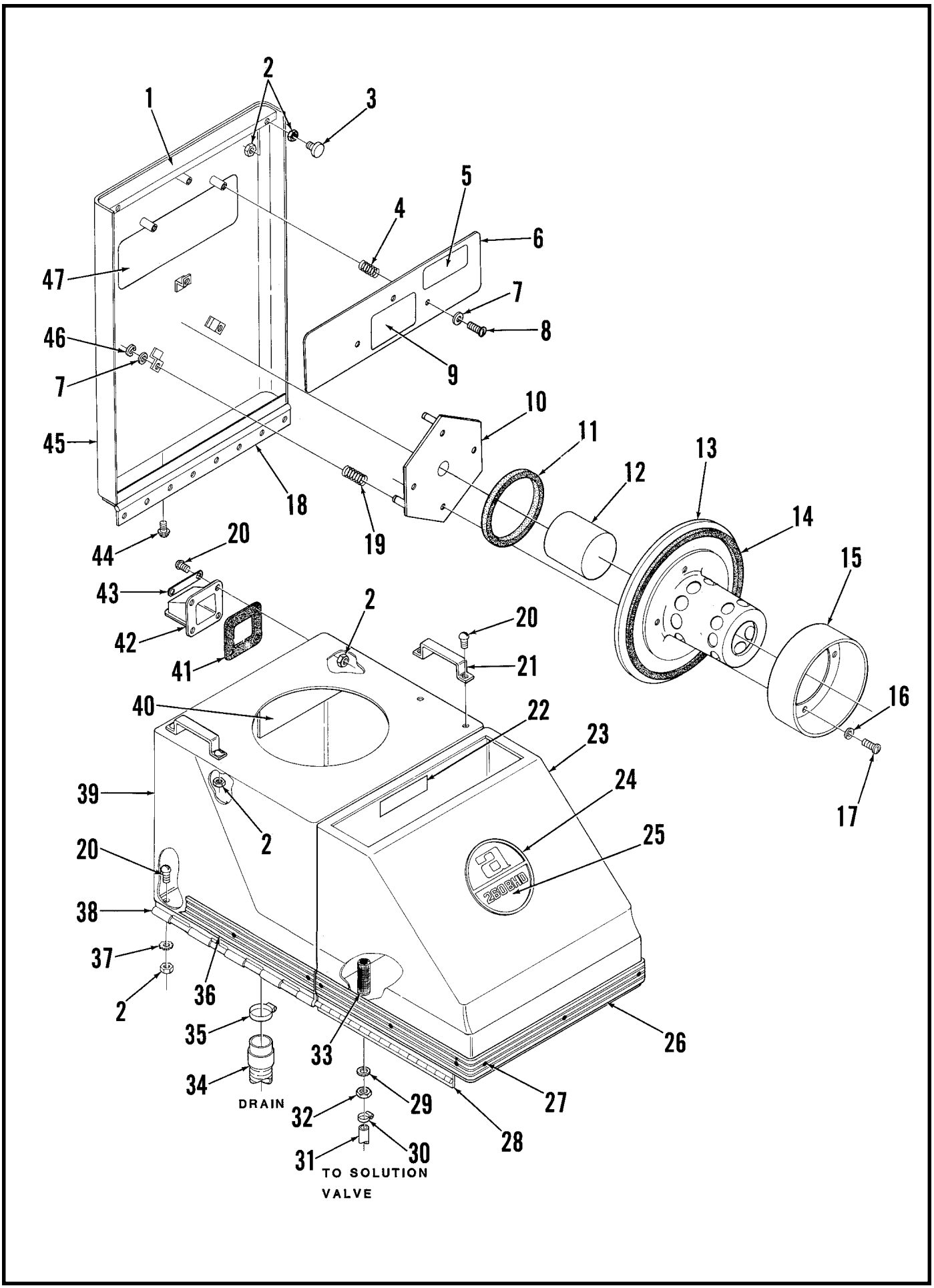
1
2
3
4
5
6
7
8
9
10
11
12
13
14
15
16
17
18
19
20
21
22
23
24
25
26
27
28
29
30
31
32
33
34
35
36
37
38
39
40
41
42
43
44
45
46
47
DRAIN
TO SOLUTION VALVE
260BHD

HOOD & TANKS

Item	Part No.	Qty	Description
1	016358	1	Decal, Hood
2		18	1/4-20 Nut
3	386312	2	Hood Stop
4	372724	3	Spring
5	016185	1	Decal, Low Sudsing
6	372726	1	Solution Tank Cover
7	325276	6	Washer
8		3	#6-32 x 1/4 Brass Screw
9	014030	1	Decal, Caution
10	372538	1	Mount
11	372716	1	Gasket
12	385198	1	Float
13	385276	1	Cover
14	372718	1	Gasket
15	385274	1	Deflector
16		4	#10 Washer
17		4	#10-24 x 3/8 Screw
18	372693	1	Hood Hinge
19	379170	3	Spring
20		19	1/4-20 x 5/8 Brass Screw
21	209952	2	Handle
22	016057	1	Decal, Caution
23	372214	1	Solution Tank
	372239	1	Solution Tank Assembly (#22-29,32-33)
24	014513	1	Decal, Logo
25	---	-	intentionally omitted
26	372406	1	Bumper (not used after Serial No. 515582)
*	372408	1	Strap
27	376614	15	Screw
*	376608	15	Well Nut
*	376616	15	Cap
28	372332	1	Hinge
29	368776	1	Sealing Washer
30	219932	1	Hose Clamp
31	375406	1	Solution Hose
*	373686	2	Spring (inside #30)
32		1	5/8-18 Nut
33	395909	1	Strainer
34	395865	1	Drain Hose
35	329145	1	Hose Clamp
36	372402	2	Bumper (not used after Serial No. 515582)
*	372400	2	Strap
37		6	1/4 Lock Washer
38	374560	1	Hinge
39	372217	1	Recovery Tank
	372251	1	Recovery Tank Assembly (#2,20,21,36-43)
40	205829	1	Deflector
41	374558	1	Gasket
42	385287	1	Inlet Adapter
43	374566	2	Plate
44		8	#10-24 x 1/4 Screw
45	372024	1	Hood
	372019	1	Hood Assembly (#1-19,44-47)
46	321125	3	Retaining Ring
47	016225	1	Decal, Maintenance

* = Not Shown

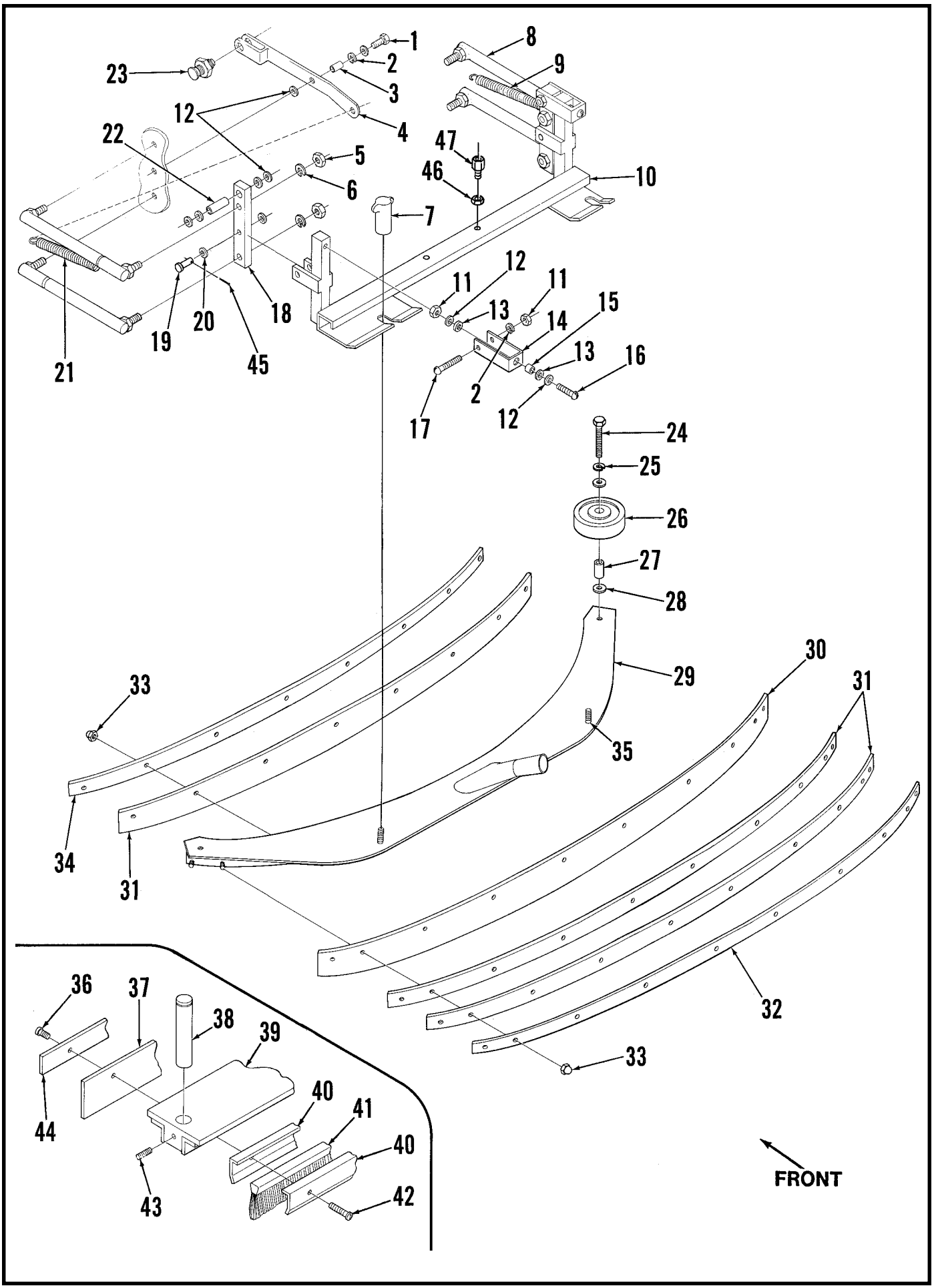
1
2
3
4
5
6
7
8
9
10
11
12
13
14
15
16
17
18
19
20
21
22
23
24
25
26
27
28
29
30
31
32
33
34
35
36
37
38
39
40
41
42
43
44
45
46
47
FRONT

SQUEEGEE & MOUNT

Item	Part No.	Qty	Description
1		2	1/4-20 x 5/8 Screw
2		4	1/4 Lock Washer
3	206784	2	Bushing
4	371831	1	Left Arm
*	371858	1	Right Arm
5		4	5/16-24 Nut
6		4	5/16 Lock Washer
7	370711	2	Thumb Nut
8	365289	4	Rod
9	371874	1	Right Spring
10	371795	1	Squeegee Mount
11		4	1/4-20 Nut
12		14	1/4 Washer
13	163880	4	Spring Washer
14	371823	2	U Clamp
15	206784	2	Bushing
16		2	1/4-20 x 1-3/4 Screw
17		2	1/4-20 x 1-1/2 Screw
18	371807	2	Adjusting Bar
19	487989	2	Pin
20	150142	4	Washer
21	371866	1	Left Spring
22	366862	2	Bushing
23	365548	2	Lock
	372750	1	Squeegee Assembly (#24-35)
**	372786	1	Gum Rubber Curved Blade Kit
**	372784	1	Neoprene Curved Blade Kit
24		2	1/4-20 x 1-1/2 Screw
25		2	1/4 Lock Washer
26	363855	2	Wheel
27	471220	2	Wheel
28		4	1/4 Washer
29	372752	1	Tool
30	372766	1	Gum Rubber Blade
31	372764	2	Neoprene Blade
32	372772	1	Outer Strap
33	372776	18	Nut
34	372770	1	Inner Strap
35		2	5/16-18 x 3/4 Bolt
	550400	1	Dry Pick-Up Tool Assembly (#24-28,36-44)
36	378236	10	Screw
37	371033	1	Blade
38	370983	2	Axle
39	371045	1	Tool
40	550412	2	Plate
41	550407	1	Brush Strip
42	378228	10	Screw
43		2	1/4-20 x 3/16 Set Screw
44	371025	1	Front Strap
45		2	3/32 x 3/4 Roll Pin
46		2	5/16-24 Left Hand Thread Jam Nut
47	374940	2	Turnbuckle

* = Not Shown

** = Replacement Blade Kits

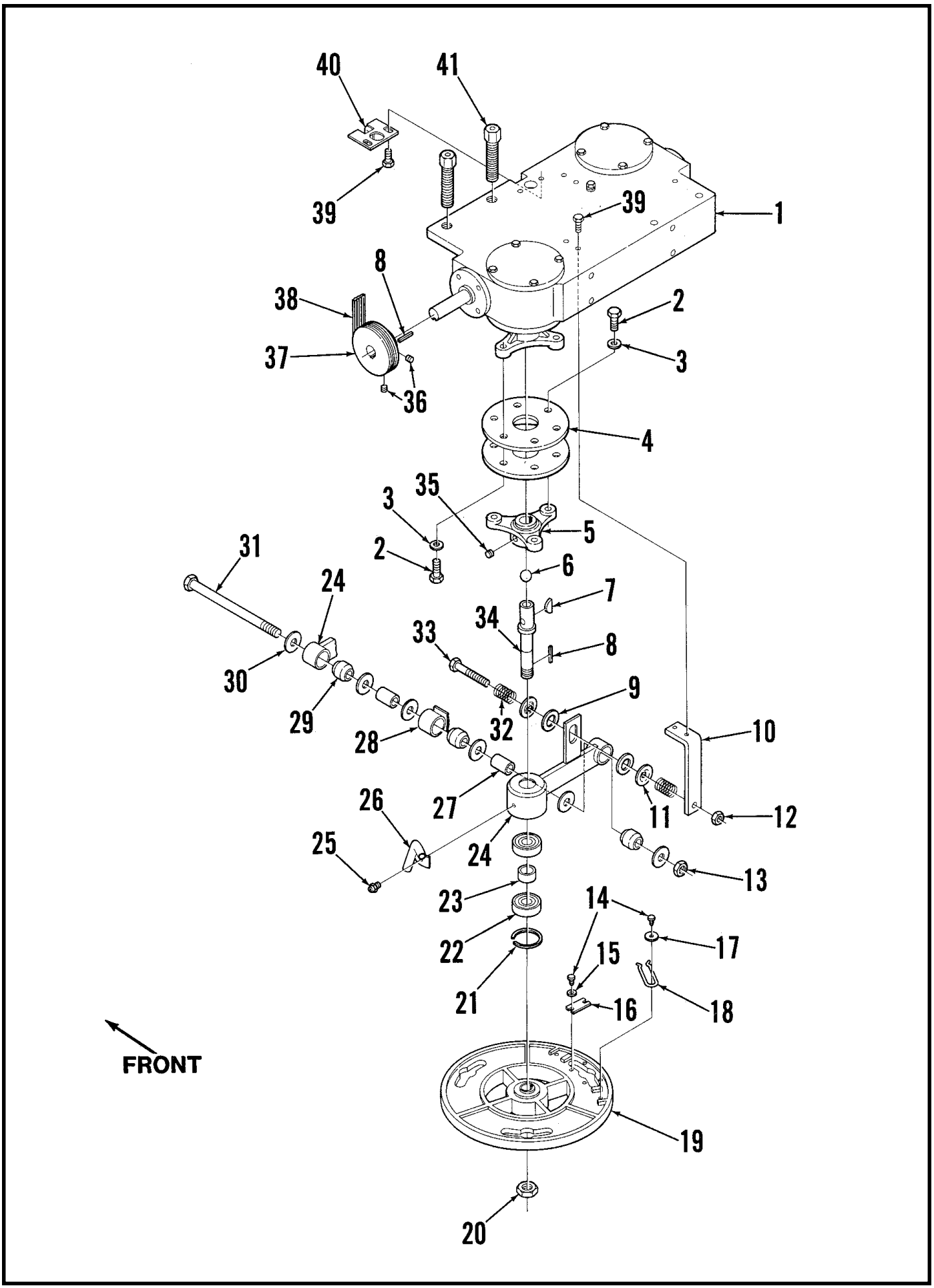
40
41
39
39
1
8
38
2
37
3
36
4
35
3
5
31
2
6
24
7
34
33
8
30
9
29
32
10
28
27
11
12
26
24
25
13
23
14
22
17
15
21
16
18
FRONT
19
20

GEAR BOX

Item	Part No.	Qty	Description
1	550926	1	Gear Case **TSB610, G-8**
2	366447	12	Bolt
3		12	3/8 Washer
4	104647	4	Flex Disc
5	366382	2	Universal Casting
6	366404	2	Ball
7	366366	2	Woodruff Key
8	367958	3	Key
9	367184	4	Thrust Bearing
10	378437	2	Bracket
11	440760	4	Washer
12		2	3/8-16 Nut
13		1	1/2-13 Nut
14		6	#10-32 x 1/2 Screw
15		4	#10 Washer
16	366455	2	Plate
17	151114	2	Washer
18	366463	2	Spring Retainer
19	367931	2	Brush Holder
20	366420	2	Lock Nut
	550206	1	Arm Assembly (#21-25)
21	366544	2	Retaining Ring
22	372773	4	Ball Bearing
23	366528	2	Bushing
24	550190	2	Arm
25	369128	2	Grease Fitting
26	369136	1	Left Solution Pipe
*	369144	1	Right Solution Pipe
27	440698	2	Bushing
28	366581	1	Lever
29	114545	3	Bushing
30		6	1/2 Washer
31	440787	1	Bolt
32	171177	4	Spring
33		2	3/8-16 x 2 3/4 Bolt
34	366412	2	Brush Holder Shaft
35		2	3/8-16 x 1/2 Set Screw
36		2	5/16-18 x 1/2 Set Screw
37	372889	1	Sheave
38	372242	1	Belt
39		6	1/4-20 x 1 Screw
40	372702	1	Guide Plate
41	378631	2	Stud
			Pad Holders and Brushes **
*	505760	2	Pad Holder
*	505761	2	Magna Grit 46 Brush
*	505762	2	Dyna Grit 80 Brush
*	505763	2	AgLite Grit 500 Brush
*	505764	2	Prolene Brush
*	505765	2	Prolite Brush
*	505766	2	Union Mix Brush
*	505767	2	MidGrit 240 Brush
*	505768	2	MidLite 180 Brush

* = Not Shown
** = Not Included

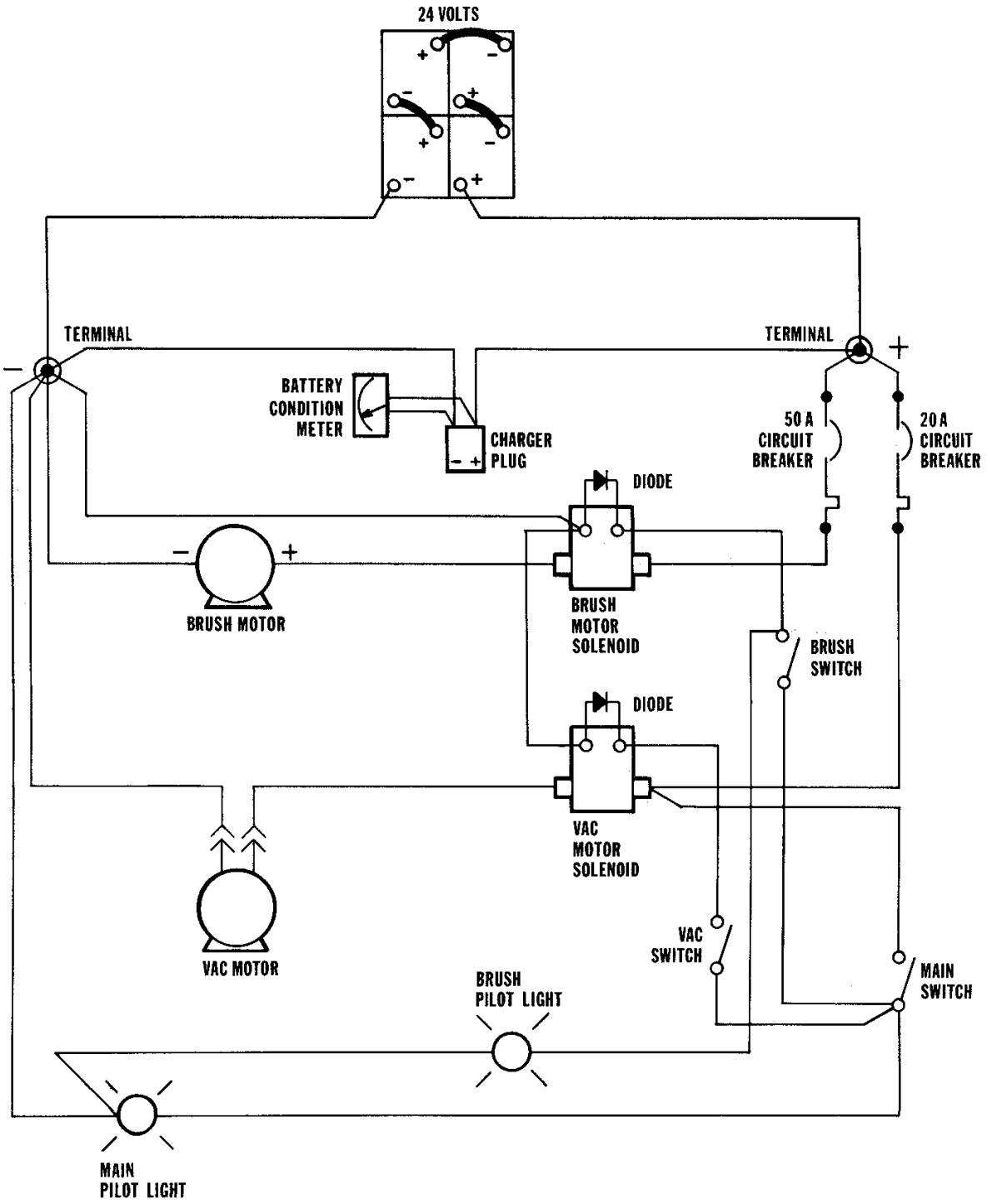
24 VOLTS
TERMINAL
TERMINAL
BATTERY CONDITION METER
CHARGER PLUG
50 A CIRCUIT BREAKER
20 A CIRCUIT BREAKER
DIODE
BRUSH MOTOR
BRUSH MOTOR SOLENOID
BRUSH SWITCH
DIODE
VAC MOTOR SOLENOID
VAC MOTOR
VAC SWITCH
MAIN SWITCH
BRUSH PILOT LIGHT
MAIN PILOT LIGHT

WIRING DIAGRAM

Part No.	Qty	Description
364210	1	Battery Condition Meter
467410	2	Brush Light, Main Pilot Light
372765	1	Brush Motor
468358	1	Brush Motor Solenoid
207071	1	Brush Switch
372972	1	Charger Plug
395454	1	Circuit Breaker 20 Amp
386725	1	Circuit Breaker 50 Amp
207071	1	Main Switch
389265	2	Rectifier
469858	2	Stand-Off
376365	1	Vacuum Motor
468358	1	Vacuum Motor Solenoid
388019	1	Vacuum Switch