Electronic Service Manuals

This electronic document is provided as a service to our customers. We do not create the contents of the information contained in this document. Should you have detailed questions pertaining to the information contained in this document, you may contact Michco, or the manufacturer which provided the original information in this electronic deliverable. Michco's only part in this electronic deliverable was the electronic assembly process.

You may contact Michco through the following methods:
Phone (517) 484-9312 or (800) 331-3339 MI, OH, IN only
2011 N. High St. -- Lansing, Michigan -- 48906
Fax: (517) 484-9836
Email: CustServ@Michco.com
Web site: www.Michco.Com
Parts Web site: www.FloorMachineParts.Com

Order Parts on Line at:
www.FloorMachineParts.Com

Directly to Parts & Service:
By Email: **Shop@Michco.com**
By Fax: (517) 702-2041
By Voice: Use numbers above.

Serving the Cleaning Industry Since 1922

Notice: All copyrighted material remains property of original owners, all trademarks are property of respective owners. Manuals are subject to Manufacturer's reproduction limitations. Originals or reproductions were provided by manufacturers through a request. We make no warranty as to the correctness of information provided in this document and you assume all risk.

Optional
1:1 Poly Adapter

Model No: 800420

■ OPERATION ■ SERVICE ■ PARTS ■ CARE

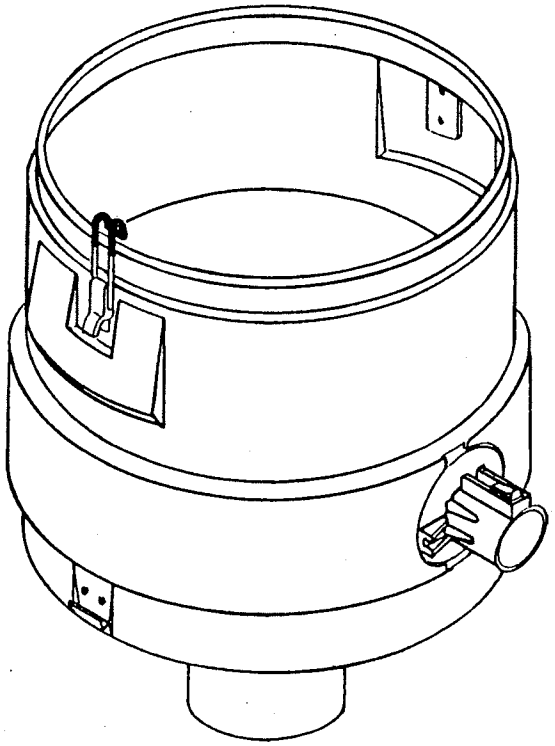

Revised 7/01

Minuteman®

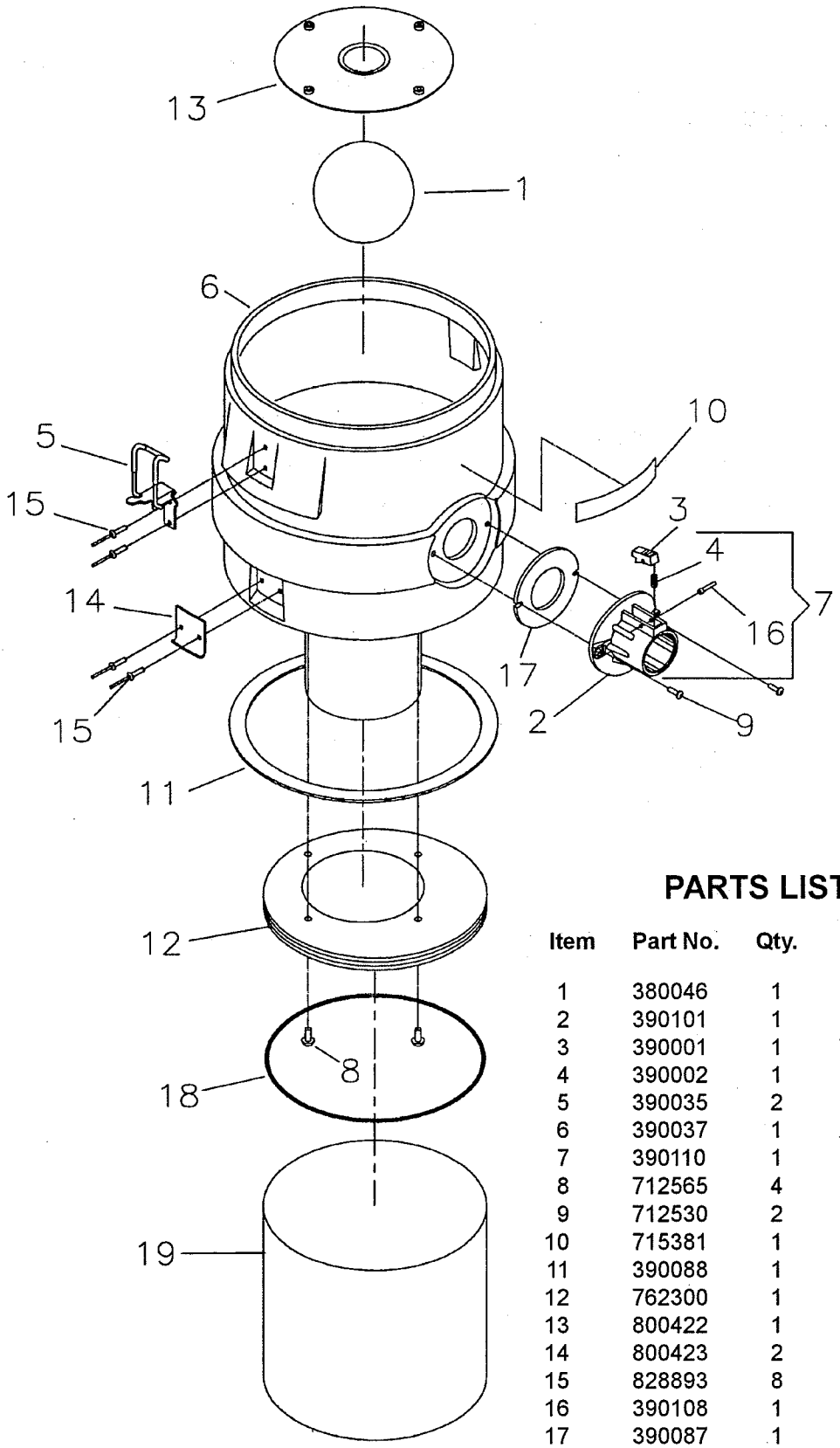

PARTS LIST

Item	Part No.	Qty.	Description
1	380046	1	Hollow Rubber Ball
2	390101	1	Intake
3	390001	1	Trigger
4	390002	1	Return Spring
5	390035	2	Latch 390 Series Coated
6	390037	1	Adapter Poly 1:1
7	390110	1	Intake Assembly Aluminum
8	712565	4	SCR-MC 1/4-20 x .62 SS
9	712530	2	SCR-MC 10-24 x .62 SS
10	715381	1	Decal, Minuteman
11	390088	1	Gasket PS Back 1:1 Poly
12	762300	1	Mtg. Plate Prefilter
13	800422	1	Liquid Shutoff Plate
14	800423	2	Latch Plate
15	828893	8	Rivet, Bap KTR64BX
16	390108	1	Pivot Pin
17	390087	1	Gasket Diecut VNN Intake
18	760260	1	Spring, Bag Retainer
19	760234	1	Lint Filter Bag

TANK/FILTER SET-UP PROCEDURE

1. When using the poly adapter for dry pick-up follow the described procedures below for poly 6 mil bag installation.
   A. Insert poly bag into tank assembly draping all excess bag height over the edge of tank. Fully open bag inside tank to ensure that the bag is not bunched up and fully extended to the bottom of tank.
   B. Depending on the weight of the dry material being recovered, it may be necessary to slit the poly bag 2" horizontally approximately 2" down from the top of the tank. This will stop the poly bag from closing in on the bottom on the poly adapter. After filling the bag, tie off bag below slit and remove from tank.
2. Install poly 1:1 adapter (4) on top of tank asy. (6) as shown and snap tank latches.
3. Install filter protector (3) over cloth filter (2) and place in poly 1:1 adapter (4).
4. Position vacuum motor lid asy. (1) on top of poly 1:1 adapter and snap lid latches in place.

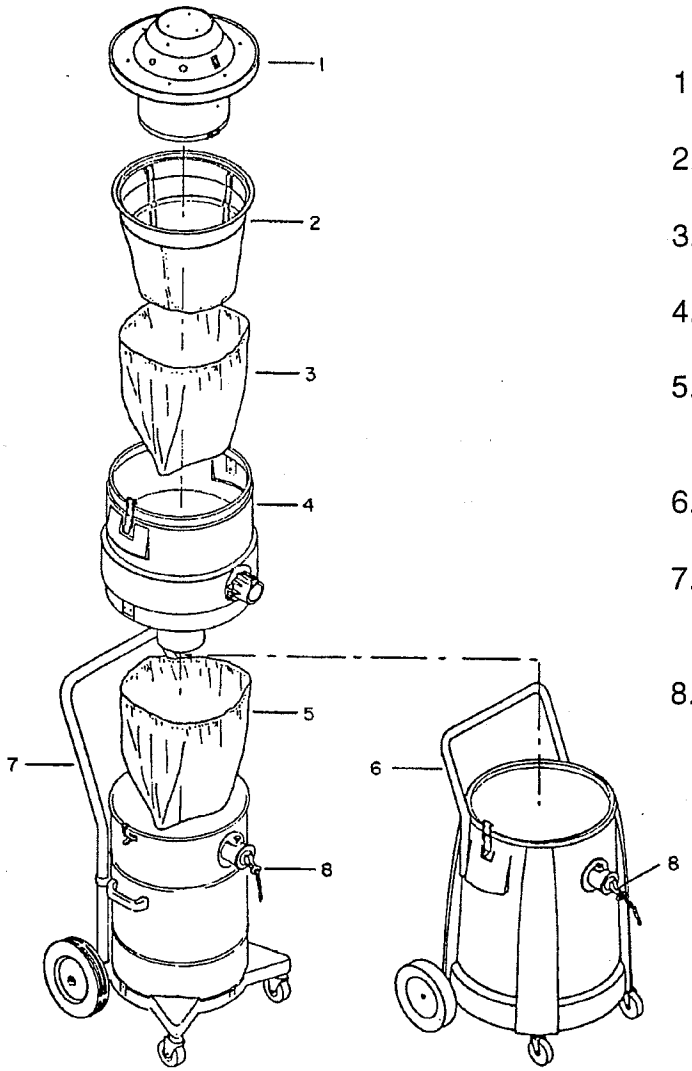

1. Motor lid assembly
2. Cloth filter with frame
3. Filter protector
4. 1:1 Poly adapter
5. Plastic liner for top fill dry pickup
6. 15/20 gallon Poly tank
7. Painted or stanless 15 gallon tank
8. Optional intake plug PN 750402

LIMITED WARRANTY

Minuteman International, Inc. warrants to the original purchaser/user that this product is free from defects in workmanship and materials under normal use and service for a period of two years from date of purchase. In addition, Minuteman International, Inc. will, at its option, honor labor warranty claims for the first 12 months from date of sale, provided such claims are submitted through and approved by factory authorized repair stations. Minuteman International, Inc. will, at its option, repair or replace without charge, except for transportation costs, parts that fail under normal use and service when operated and maintained in accordance with the applicable operation and instruction manuals.

This warranty does not apply to normal wear, or to items whose life is dependent on their use and care, such as belts, cords, switches, hoses, rubber parts, electrical motor components or adjustments. Parts not manufactured by Minuteman International, Inc. such as engines, batteries, battery chargers, hydraulic pumps, and tires are covered by and subject to the warranties and/ or guarantees of their manufacturers. Please contact Minuteman International, Inc. for procedures in warranty claims against these manufacturers.

Special warning to purchaser — Use of replacement filters and/or prefilters not manufactured by Minuteman International, Inc. or its designated licensees, will void all warranties expressed or implied.

A potential health hazard exists without exact original equipment replacement.

All warranteed items become the sole property of Minuteman International, Inc. or its original manufacturer, whichever the case may be.

Minuteman International, Inc. disclaims any implied warranty, including the warranty of merchantability and the warranty of fitness for a particular purpose. Minuteman International, Inc. assumes no responsibility for any special, incidental or consequential damages.

This limited warranty is applicable only in the U.S.A. and Canada, and is extended only to the original user/purchaser of this product. Customers outside the U.S.A. and Canada should contact their local distributor for export warranty policies. Minuteman International, Inc. is not responsible for costs or repairs performed by persons other than those specifically authorized by Minuteman International, Inc. This warranty does not apply to damage from transportation, alterations by unauthorized persons, misuse or abuse of the equipment, use of non-compatible chemicals, or damage to property, or loss of income due to malfunctions of the product.

If a difficulty develops with this machine, you should contact the dealer from whom it was purchased.

This warranty gives you specific legal rights, and you may have other rights which vary from state to state. Some states do not allow the exclusion or limitation of special, incidental or consequential damages, or limitations on how long an implied warranty lasts, so the above exclusions and limitations may not apply to you.

Minuteman®

World Headquarters
Minuteman International, Inc.
111 South Rohlwing Road
Addison, Illinois 60101

(630) 627-6900
FAX (630) 627-1130

Minuteman Canada, Inc.
2210 Drew Road
Mississauga, Ontario
L5S 1B1

(905) 673-3222
FAX (905) 673-5161

987797
Printed in U.S.A.