Electronic Service Manuals

This electronic document is provided as a service to our customers. We do not create the contents of the information contained in this document. Should you have detailed questions pertaining to the information contained in this document, you may contact Michco, or the manufacturer which provided the original information in this electronic deliverable. Michco's only part in this electronic deliverable was the electronic assembly process.

You may contact Michco through the following methods:
Phone (517) 484-9312 or (800) 331-3339 MI, OH, IN only
2011 N. High St. -- Lansing, Michigan -- 48906
Fax: (517) 484-9836
Email: CustServ@Michco.com
Web site: www.Michco.Com
Parts Web site: www.FloorMachineParts.Com

Order Parts on Line at:
www.FloorMachineParts.Com

Directly to Parts & Service:
By Email: **Shop@Michco.com**
By Fax: (517) 702-2041
By Voice: Use numbers above.

Serving the Cleaning Industry Since 1922

Notice: All copyrighted material remains property of original owners, all trademarks are property of respective owners. Manuals are subject to Manufacturer's reproduction limitations. Originals or reproductions were provided by manufacturers through a request. We make no warranty as to the correctness of information provided in this document and you assume all risk.

14HP BRIGGS & STRATTON

Vacuum Switch Installation

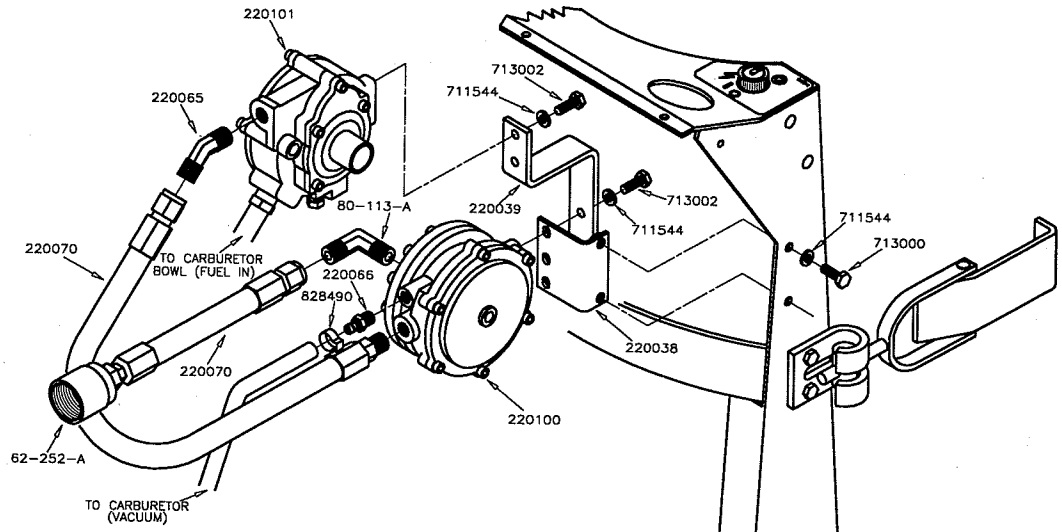

CURRENT FUEL SYSTEM

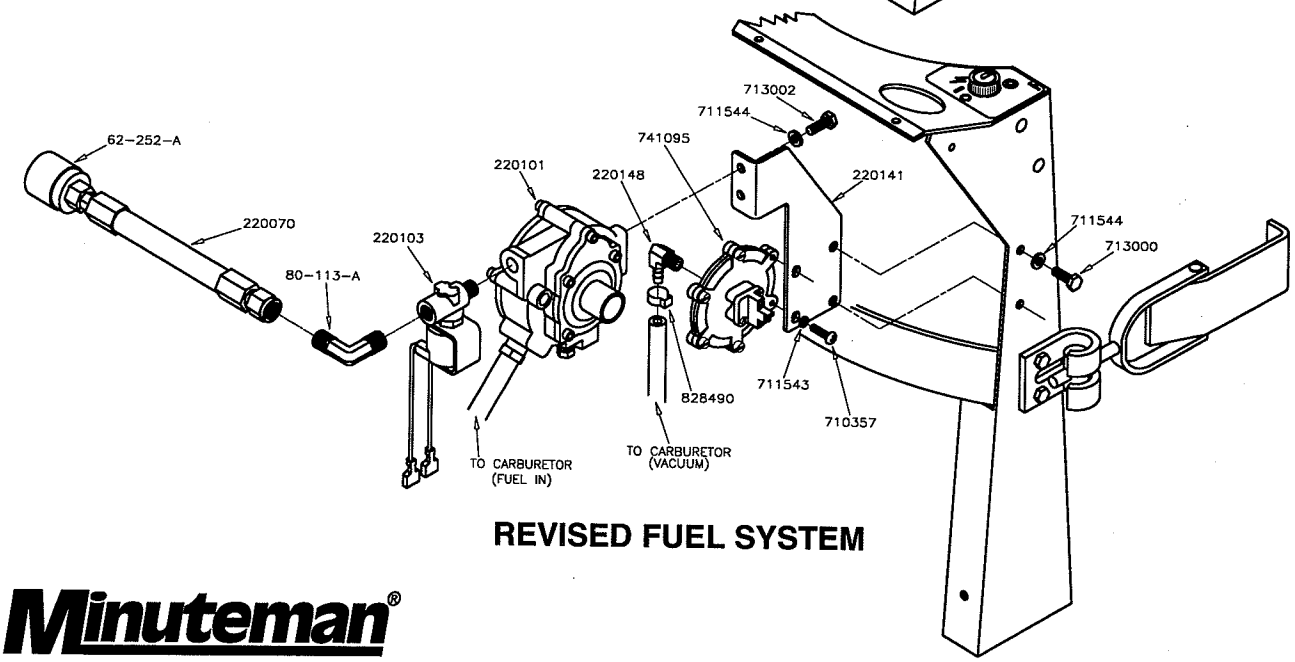

REVISED FUEL SYSTEM

World Headquarters
Minuteman International, Inc.
111 South Rohlwing Road
Addison, Illinois 60101

(630) 627-6900
FAX (630) 627-1130

Minuteman Canada, Inc.
2210 Drew Road
Mississauga, Ontario
L5S 1B1

(905) 673-3222
FAX (905) 673-5161

PART NO.	QTY.	DESCRIPTION
741095	1	Microvac 1501 L
220103	1	Electric Fuel Lock-out
710357	2	SCR-MC 10-32 x .75 STPL
220141	1	Mounting Bracket
741094	1	Wire Harness
220148	1	Elbow, 1/8 MPT x 1/4 BARB
828490	1	Hose Clamp

986754
Printed in U.S.A.

REMOVAL OF OLD LOCK-OFF

1. Disconnect and remove the 12V battery.
2. Place the battery on a trickle charge for 1 hour.
3. Remove hose 220070 from fitting 220065.
4. Remove fitting 220065.
5. Cut off clamp 828490 and remove hose 220108.
6. Remove bolts 713002 holding vacuum lock-off.
7. Remove 220101 by way of the bolts 713002.
8. Remove the hose assembly 220070 with 62-252-A from fitting 80-113-A.
9. Remove fitting 80-113-A.

INSTALLATION OF NEW LOCK-OFF

10. Use Teflon pipe thread tape on all pipe thread connections when installing the Microvac kit.
11. Install regulator 220101 onto bracket 220148 using the bolts 713002.
12. Mount the bracket to the frame using the bolts 713000.
13. Install the electric lock-off 220103 into 220101. Tighten until the wires are pointing down.
14. Install fitting 80-113-A into the electric lock-off. Tighten the fitting until it points to the right side of the machine.
15. Install hose assembly 220070 with 62-252-A on fitting 80-113-A.

INSTALLATION OF THE MICROVAC 1501L

16. With the Microvac held level according to the "Beam" name, remove the (2) farthest right side cover screws.
17. Mount the Microvac onto the bracket 220141 using the screws 710357 provided. Insert the screws through the bracket holes and then into the empty holes of the Microvac unit. Tighten screws securely.
18. Install the brass elbow 220148 into the rear of the Microvac. Tighten until the hose barb end points down.
19. Install hose #13 onto the hose barb end and secure with clamp 828490.

ELECTRICAL CONNECTION

20. The top terminal connection on the Microvac is labeled "C" (common). Connect the yellow/violet wire from the "C" terminal to either black wire of the electric lock-off.
21. Connect the other black wire of the electric lock-off to a good round close by.
22. The center terminal on the Microvac is labeled "NC" (normally closed). Connect the violet wire to this terminal and then directly to the "S" terminal of the ignition switch. Reconnect the original violet wire to the male side - by of the violet wire now connected to the "S" terminal.
23. The bottom terminal on the Microvac is labeled "NO:" (normally open). Connect the red/yellow wire from this terminal to the "L" terminal on the ignition switch.
24. Install and reconnect the 12V battery.
25. Connect a fueled LP tank, open the valve, and start the engine.
    NOTE: Once machine starts, hold key in "start" position for 3 to 7 seconds, then release.